3.3 PN Junction: Dynamic Behavior

Small-Signal Analysis

- Equivalent Circuit
- Forward-Bias / Reverse-Bias Characteristics
- Depletion Layer Capacitance
- Diffusion Admittance

Pierret, Chapter 7, page 301-324

Small-Signal Analysis
– Equivalent Circuit –

- AC current *i* flowing through the diode biased by small AC voltage v_a superimposed on DC bias V_A
- **Small-signal admittance Y** consists of capacitive C and conductive G component:

$$\boxed{Y = i / v_a = G + j\omega C}$$

- Equivalent circuit of diode consists of junction admittance Y and series resistance R_s of quasineutral regions

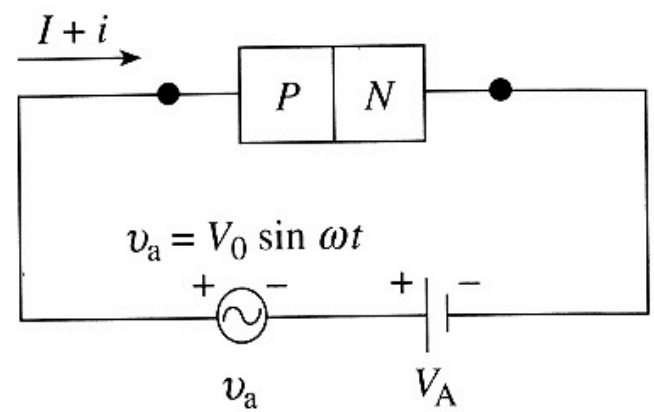

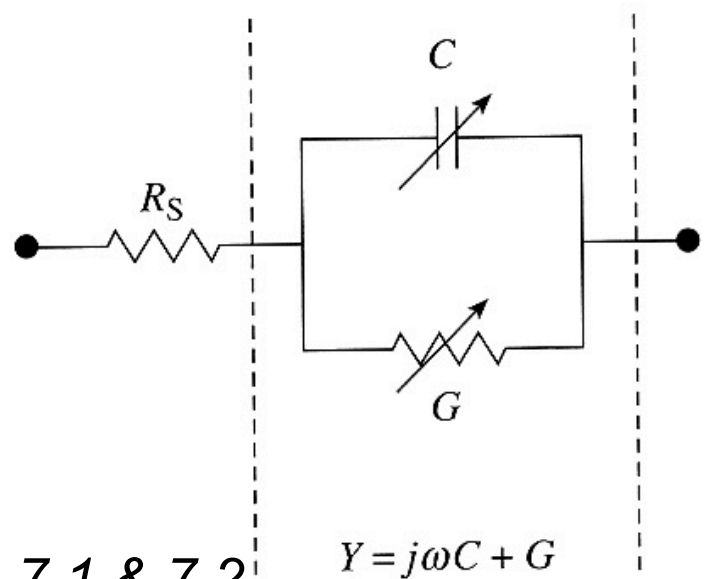

Pierret, Fig. 7.1 & 7.2

PN Junction: Small-Signal Behavior

(a) Reverse Bias

- Small signal behavior is dominated by **junction** or **depletion-layer capacitance C_j**
- The junction capacitance C_j arises from **majority carrier (charge) oscillations** at the edges of the depletion region
- Conductance is very small (i.e., very high resistance)

(b) Forward Bias

- With increasing forward bias, the **diffusion admittance $Y_d = G_d + i\omega C_d$** dominates the small signal behavior
- The diffusion capacitance C_d arises from **minority-carrier (charge) oscillations** in the quasineutral regions adjacent to the depletion region

Junction Capacitance

- The so-called junction or depletion-layer capacitance originates from charge oscillations at the edge of the depletion region caused by the applied ac voltage v_a
- The capacitance resulting from the small oscillations of the depletion region around its steady-state width W is equivalent to that of a parallel plate capacitor with width W

$$C_j = \frac{dQ(V_A, v_a)}{dv_a} = \frac{K_s \varepsilon_0 A}{W(V_A)}$$

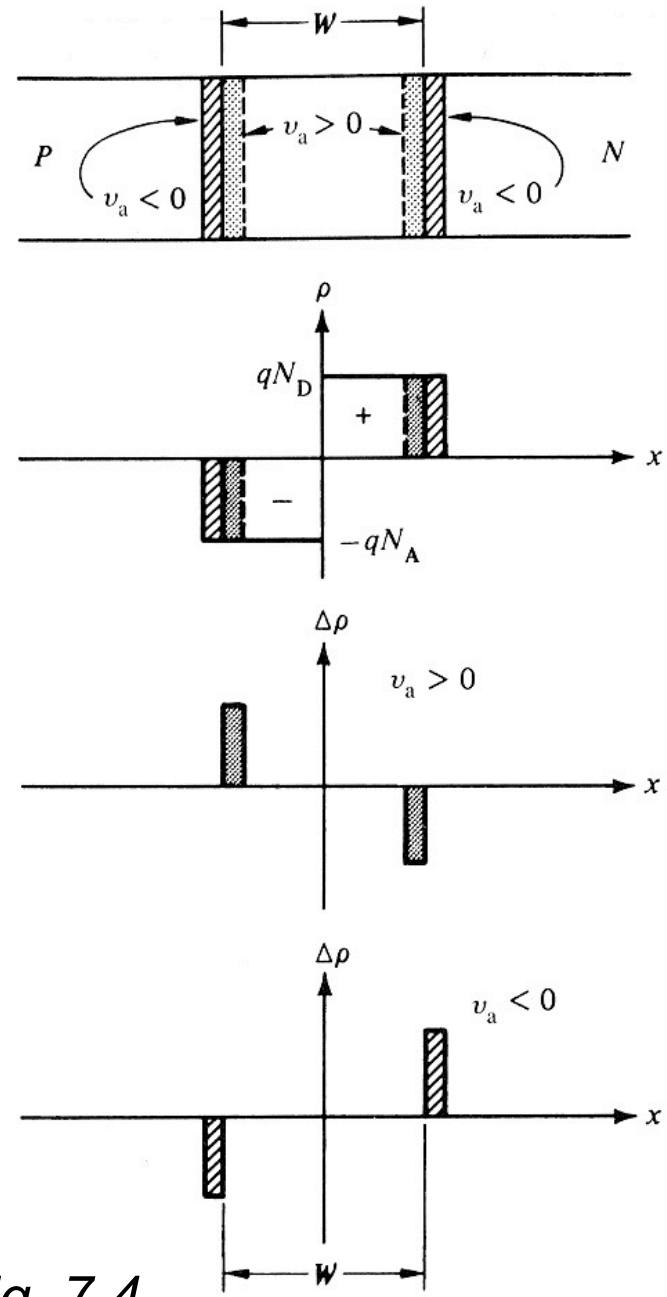

Pierret, Fig. 7.4

Junction Capacitance C_j

- Junction capacitance C_j depends on the applied dc bias V_A, because the depletion layer width W is a function of V_A; in case of a step junction, the depletion layer width becomes

$$W = \sqrt{\frac{2K_s\varepsilon_0}{q}\frac{N_A + N_D}{N_A N_D}\left(V_{bi} - V_A\right)}$$

$$\boxed{C_j = \frac{K_s\varepsilon_0 A}{W(V_A)} = \frac{K_s\varepsilon_0 A}{\sqrt{\frac{2K_s\varepsilon_0}{q}\frac{N_A + N_D}{N_A N_D}\left(V_{bi} - V_A\right)}}}$$

- Characteristics of C_j
  - C_j originates from **majority carrier oscillations**
  - C_j decreases with increasing reverse bias $-V_A$
  - Varactor diodes use C_j as voltage-controlled capacitor
  - Majority carrier response time in Si is $< 10^{-10}$ s, i.e. C_j is frequency-independent up to very high frequencies

Junction Capacitance C_j

- The junction capacitance C_j can be expressed in terms of its value C_{j0} for $V_A = 0$:

$$\boxed{C_j = \underbrace{\frac{K_s \varepsilon_0 A}{\sqrt{\frac{2K_s\varepsilon_0}{q}\frac{N_A + N_D}{N_A N_D} V_{bi}}}}_{=C_j(V_{bi}) \equiv C_{j0}} \frac{1}{\sqrt{\left(1 - \frac{V_A}{V_{bi}}\right)}} = \frac{C_{j0}}{\sqrt{\left(1 - \frac{V_A}{V_{bi}}\right)}}}$$

- The measurement of the junction capacitance is used as diagnosis tool (**C-V measurement**) to get an inside view of the junction; assuming an asymmetric step junction, e.g. $N_D \gg N_A = N_B$, one obtains:

$$\boxed{\frac{1}{C_j^2} = \frac{2}{qK_s\varepsilon_0 A^2 N_B}\left(V_{bi} - V_A\right)}$$

- The linear $1/C_j^2$ vs. V_A relationship has a slope proportional to N_B^{-1} and an intersection with the V-axis at $V_A = V_{bi}$

Forward-Bias Diffusion Admittance

- The diffusion admittance

  $$Y_D = G_D + j\omega C_D$$

  is caused by **minority carrier oscillations** in the quasi-neutral regions adjacent to the depletion region
- Small signal equivalent circuit of forward-biased pn-junction consists of
  – junction capacitance C_j,
  – diffusion capacitance C_D, and
  – diffusion conductance G_D
- Minority carrier lifetime limits the frequency up to which the minority carriers can follow v_a

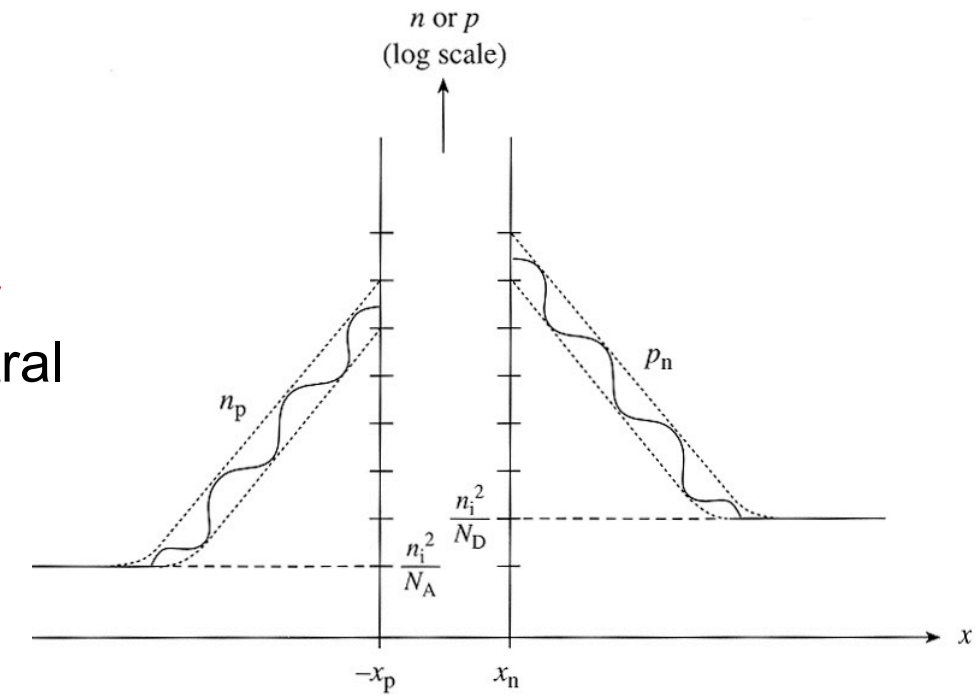

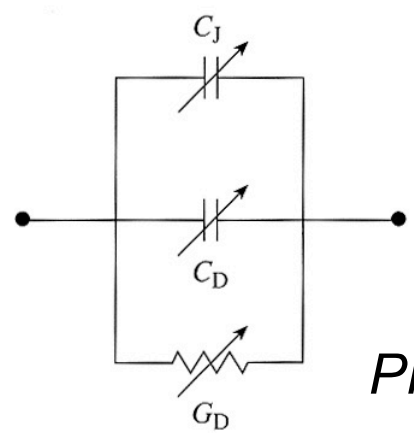

Pierret, Fig. 7.8

Diffusion Admittance Relationship

- AC behavior can be extracted similar to dc behavior from continuity equations (example: **p^+-n junction**)
- Continuity equation for n-side minority carriers

$$\frac{\partial \Delta p_n(x,t)}{\partial t} = D_p \frac{\partial^2 \Delta p_n(x,t)}{\partial x^2} - \frac{\Delta p_n(x,t)}{\tau_p}$$

with the minority carrier distribution

$$\Delta p_n(x,t) = \Delta \overline{p}_n(x) + \widehat{p}_n(x,\omega)\, e^{j\omega t}$$

- Using separation of variables, two DEs for the dc and ac terms result:

$$0 = D_p \frac{\partial^2 \Delta \overline{p}_n}{\partial x^2} - \frac{\Delta \overline{p}_n}{\tau_p} \longrightarrow \text{same as dc}$$

$$0 = D_p \frac{\partial^2 \widehat{p}_n}{\partial x^2} - \frac{\widehat{p}_n}{\tau_p / \left(1 + j\omega\tau_p\right)} \longrightarrow \text{similar to dc but } \widehat{\tau}_p = \tau_p / \left(1 + j\omega\tau_p\right)$$

Diffusion Admittance Relationship

- Boundary Conditions: $v(t) = V_A + \underbrace{v_a\, e^{j\omega t}}_{=\hat{v}_a}$

$$\Delta p_n(\infty, t) = 0$$

$$\Delta p_n(x_n, t) = \frac{n_i^2}{N_D}\left[e^{q\left(V_A + \hat{v}_a\right)/kT} - 1\right]$$

$$= \underbrace{\frac{n_i^2}{N_D}\left[e^{qV_A/kT} - 1\right]}_{=\Delta \bar{p}_n(x_n)} + \underbrace{\frac{n_i^2}{N_D}\left[e^{qV_A/kT}\left(e^{q\hat{v}_a/kT} - 1\right)\right]}_{=\hat{p}_n(x_n,\omega)\, e^{j\omega t}}$$

- for $qv_a \ll kT$, we can simplify using $e^x \approx 1 + x$ for small x

$$\hat{p}_n(x_n, \omega)\, e^{j\omega t} = \frac{n_i^2}{N_D} e^{qV_A/kT} \frac{q\hat{v}_a}{kT}$$

$$\Rightarrow \quad \boxed{\hat{p}_n(x_n, \omega) = \frac{n_i^2}{N_D} e^{qV_A/kT} \frac{qv_a}{kT}}$$

Diffusion Admittance Relationship

- Using the "new" boundary conditions and the modified minority carrier lifetime, the ac diffusion current becomes (in analogy to the dc diffusion current)

DC

$$I_{diff} = qA\frac{D_p n_i^2}{L_p N_D}\left[e^{qV_A/kT} - 1\right] = \underbrace{qA\sqrt{\frac{D_p}{\tau_p}}\frac{n_i^2}{N_D}}_{=I_S}\left[e^{qV_A/kT} - 1\right]$$

AC

$$i_{diff} = qA\sqrt{\frac{D_p}{\tau_p}}\sqrt{1 + j\omega\tau_p}\,\frac{n_i^2}{N_D}\left[\frac{qv_a}{kT}e^{qV_A/kT}\right]$$

$$\boxed{= \underbrace{I_S\frac{q}{kT}e^{qV_A/kT}}_{=G_0=\frac{dI}{dV_A}}\sqrt{1 + j\omega\tau_p}\;v_a = Y_D\;v_a}$$

Diffusion Admittance Relationship

- The **diffusion admittance Y_D** for the **p^+n diode**

$$Y_D = G_D + j\omega C_D = \frac{i_{diff}}{v_a} = G_0\sqrt{1 + j\omega\tau_p}$$

consists of a conductive part G_D and a capacitive part C_D

$$\boxed{\begin{aligned} G_D &= \frac{G_0}{\sqrt{2}}\left[\sqrt{1+\omega^2\tau_p^2} + 1\right]^{1/2} \\ C_D &= \frac{G_0}{\omega\sqrt{2}}\left[\sqrt{1+\omega^2\tau_p^2} - 1\right]^{1/2} \end{aligned}}$$

$$\overset{\omega\tau_p \ll 1}{\approx} G_0$$

$$\overset{\omega\tau_p \ll 1}{\approx} G_0\frac{\tau_p}{2} \equiv C_{D0}$$

- For τ_p = 1 μs, we get $\omega\tau_p$ = 1 at f = $\omega/2\pi$ = 160 kHz

Frequency Dependence of G_D and C_D

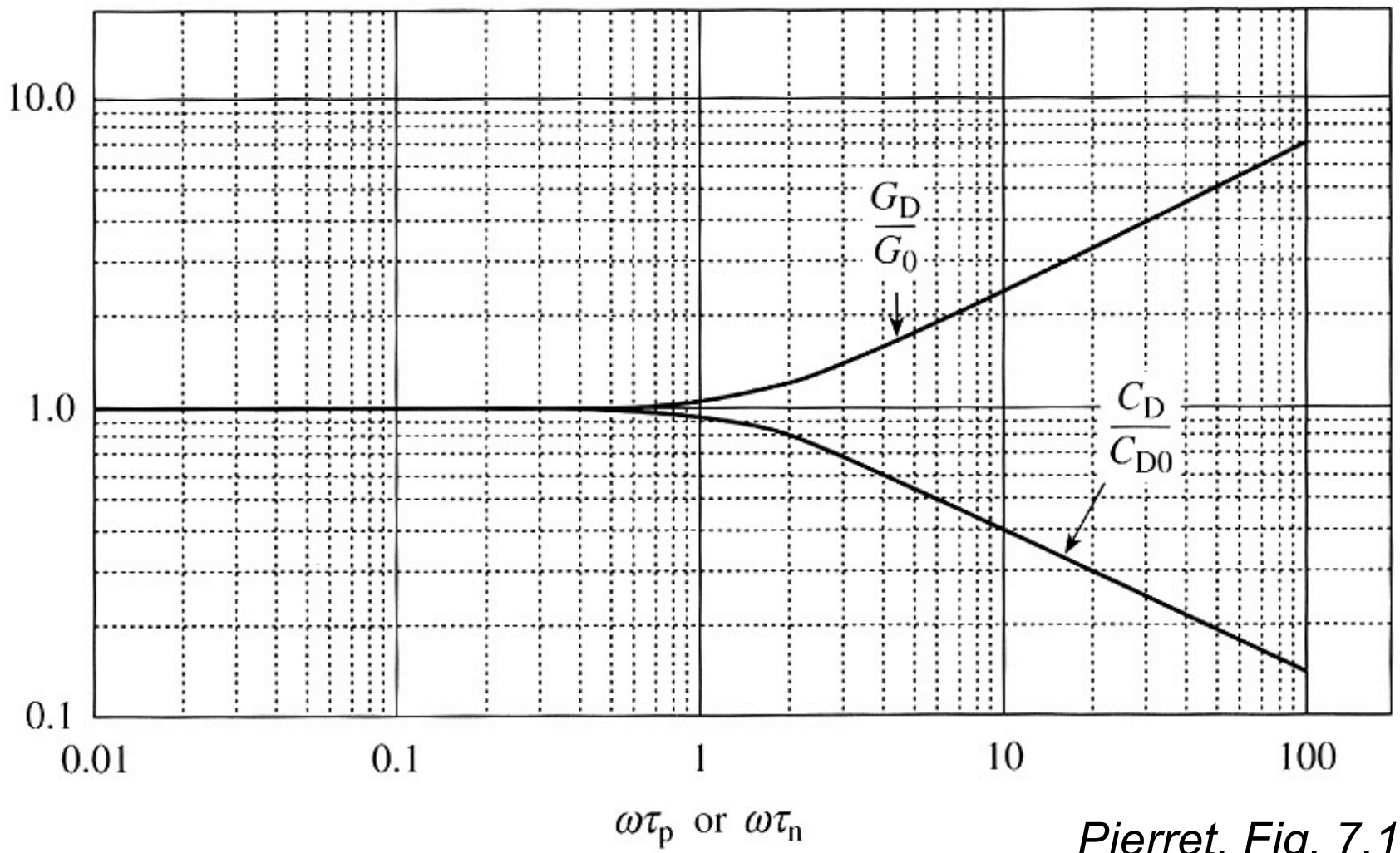

Pierret, Fig. 7.10